New Product Development Module

G.A.P OSM's NPD (New Product Development) module ensures a smooth Design & Development Activity which is based on APQP and simultaneously prepares all the required PPAP documentation.

It creates and saves all the documents required for Verification, Validation, Process and Product Monitoring. It also results in a smooth transition from Development to Production.

It keeps a tab on the Product Cost and the Time frame.

The various Activities covered under NPD module are shown below:-

- Project Initiation
- Projects Listing
- Working on Individual Product
- Function Identification & Study / Quality Function Deployment (QFD)
- Quality Function Deployment (QFD)
- Design Validation Plan (DVP)
- Performance Testing Sheet
- Product Costing Sheet
- Part List with details
- Development Status Review
- Defining the Process Stations with Required Inputs
- Process Flow Chart
- Process FMEA Work Sheet & Print Out
- Special Characteristics Matrix
- Inspection Sheet for Layout
- PDI Sheet (Pre Despatch Inspection)
- Checking Aids List
- Skills Required and Available Plan
- Skills Development Plan
- Child Part Detailing
- Child Part Raw material details
- Child Part Processing Details
- Child Part Finishing details
- Child Part Control Plans
- Part Submission Warrant
- PPAP Documents

Project Initiation

Edit Project Information

Product No.	2352	Customer Part No. :	26751542
Date:	06-05-2019	Customer:	INDRAD AUTO COMPONENTS-KANCHEEPUF
Product Description:	RADIATOR RESISTOR 0.43 OHMS		
Product Purpose:	RADIATOR RESISTOR		
Annual Qty:	120000	Project Life Expected:	5
Sale Price:	90	Target Cost:	50
Target date of Completion:	06-10-2019		
Project Designated to:	E2459(Sijo Joseph)E2406(Ankush Dhiman)E2337(Vikrant Verma) + -		
Annual Revenue:	1,08,00,000	Lifetime Revenue:	5,40,00,000

Update and Exit | Cancel

Projects Listing

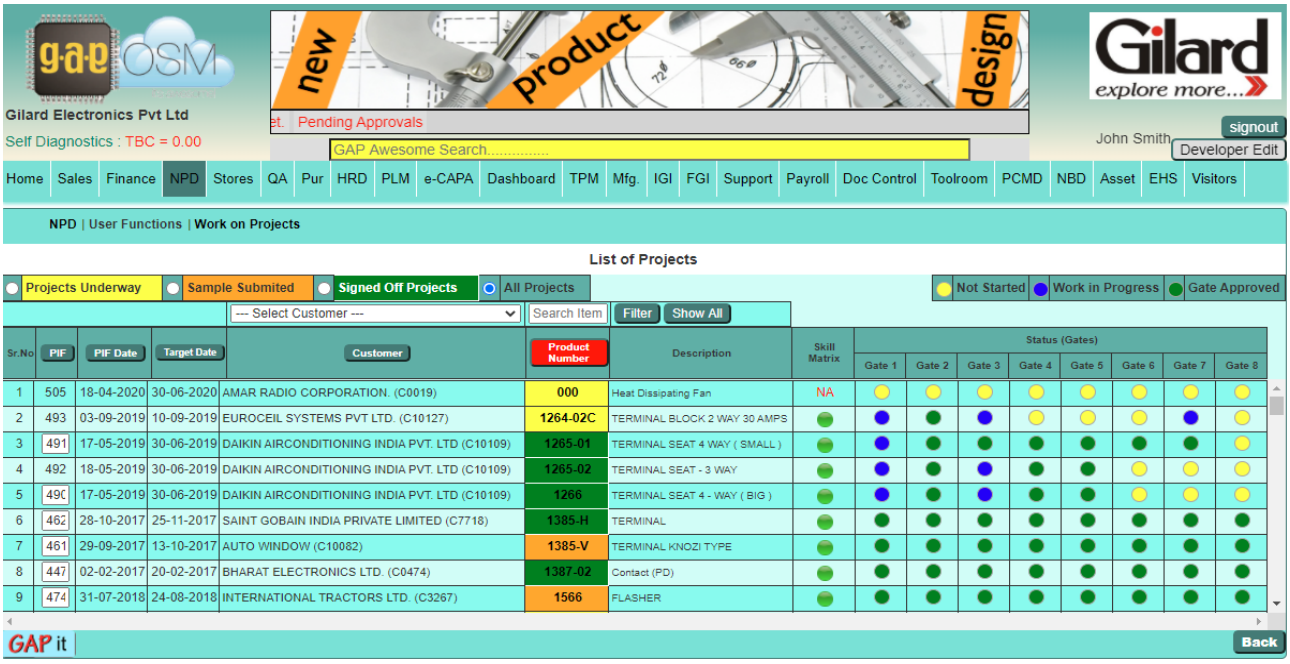

Sr.No	PIF	PIF Date	Target Date	Customer	Product Number	Description	Skill Matrix	Gate 1	Gate 2	Gate 3	Gate 4	Gate 5	Gate 6	Gate 7	Gate 8
1	505	18-04-2020	30-06-2020	AMAR RADIO CORPORATION. (C0019)	000	Heat Dissipating Fan	NA								
2	493	03-09-2019	10-09-2019	EUROCEIL SYSTEMS PVT LTD. (C10127)	1264-02C	TERMINAL BLOCK 2 WAY 30 AMPS									
3	491	17-05-2019	30-06-2019	DAIKIN AIRCONDITIONING INDIA PVT. LTD (C10109)	1265-01	TERMINAL SEAT 4 WAY (SMALL)									
4	492	18-05-2019	30-06-2019	DAIKIN AIRCONDITIONING INDIA PVT. LTD (C10109)	1265-02	TERMINAL SEAT - 3 WAY									
5	490	17-05-2019	30-06-2019	DAIKIN AIRCONDITIONING INDIA PVT. LTD (C10109)	1266	TERMINAL SEAT 4 - WAY (BIG)									
6	462	28-10-2017	25-11-2017	SAINT GOBAIN INDIA PRIVATE LIMITED (C7718)	1385-H	TERMINAL									
7	461	29-09-2017	13-10-2017	AUTO WINDOW (C10082)	1385-V	TERMINAL KNOZI TYPE									
8	447	02-02-2017	20-02-2017	BHARAT ELECTRONICS LTD. (C0474)	1387-02	Contact (PD)									
9	474	31-07-2018	24-08-2018	INTERNATIONAL TRACTORS LTD. (C3267)	1566	FLASHER									

Working on Individual Product

Product Code	750-02	Description	Door Switch	Project I/C	+ -		
Customer Code	C7453	Customer Name	SML ISUZU LIMITED	Customer Part No.			
Purpose	It is used to activate Driver cabin light while opening door of the vehicle.						
Target Date	15-04-2017	Sale Cost	Rs.67.00	Target Cost:	Rs.46.90	Tentative Cost till now	Rs. 20.32
Annual Qty.	15000 Nos	Project Life Expected	5	Annual Revenue	Rs.Lacs 10.05	Lifetime Revenue	Rs.Lacs 50.25
Actual Date of Sample Submission	20171012	Target Date of Sign Off		Actual Date of Sign Off	20180522		

Drawing | 3D pdf File | Picture

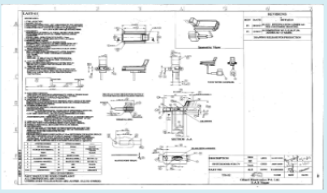

Medium Large Extra Large

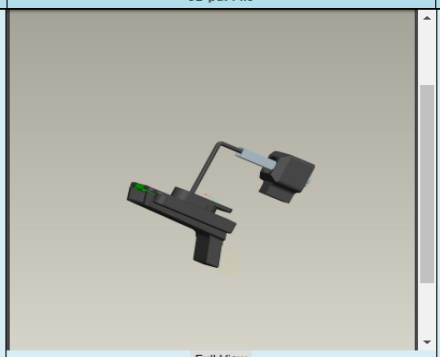

Full View

Medium Large Extra Large

Choose File | No file chosen | Upload drawing | Choose File | No file chosen | Upload 3D pdf | Choose File | No file chosen | Upload Picture | CAMERA

Part List | Costed BOM | Functions | DFMEA | Assy Process & Skill Development | PFC

PFMEA | Control Plans | PPAP | Inspection Sheet | PDI | Layout Inspection Sheet

Function Identification & Study / Quality Function Deployment (QFD)

Gilard Electronics Pvt Ltd

Self Diagnostics : TBC = 0.00

new product design

You can press F10 key to Raise a ticket. Pending Approvals

GAP Awesome Search.....

Gilard explore more...

Gagandeep Kaur | signout | Developer Edit

Home | Sales | Finance | NPD | Stores | QA | Pur | HRD | PLM | e-CAPA | Dashboard | TPM | Mfg. | IGI | FGI | Support | Payroll | Doc Control | Toolroom | PCMD | NBD | Asset | EHS | Visitors

NPD | User Function | Work on projects| Functions

Product Functions of 1266(TERMINAL SEAT 4 - WAY (BIG))

Sr.No	Main Function		Specific Needs			
1.	Primary	1.	Should withstand at 2500V for 1 minute			QFD
			Depends on	Raw Material	Process	Dimension
			1266-27-03-TERMINAL PLATE	-		
		2.	To transfer the electric supply of 300V AC 25 Amps from screw terminal to Push on Terminal Side(Should be able to withstand at 300V AC 25 Amps)			QFD
			Depends on	Raw Material	Process	Dimension
			1266-27-03-TERMINAL PLATE	Brass-		0.8 mm X 6.4 mm
			1265-06-04-SCREW M4x10	-	Tightening torque (min 15kgf.cm)	
			Enter new function based specific need			GAP it
		1.	Connector Insertion in to the terminal Plate			QFD
			Depends on	Raw Material	Process	Dimension
			1266-27-03-TERMINAL PLATE	-		6.4 -0.1mm
			1266-27-03-TERMINAL PLATE	-		6.4 -0.1mm
		2.	Insulation resistance should be more than 500 V DC/ 100M ohms			QFD

Quality Function Deployment (QFD)

Gilard explore more...
Gilard Electronics Pvt Ltd

Quality Function Deployment
of 750-02-Door Switch

Date :	28th of August 2019
Time :	12:49:57 PM
User :	Gagandeep Kaur

Function	Part List														
	0750-73-16-PVC WIRE BLACK (AVS Wire)	0080-04-01-SILICON GREASE (Silicon)	0016-02-01-Solder Wire (1.0mm dia) lead free (MTC OF RoHS)	0016-01-01-HYBRID#6633 SOLDER CONDITIONER (MTC OF RoHS)	0750-27-12-STOPPER TERMINAL (Vicker Hardness 110 VPN Min.)	0750-02-15-SPRING (Stainless Steel Wire)	0080-04-22-ARALDITE (HARDENER & RESIN) (MTC OF RoHS)	0750-27-14-FLOATING TERMINAL (Vicker Hardness 110 VPN Min.)	0750-27-18-COUPLER TERMINAL (MTC OF RoHS)	0750-43-10-BODY (ABS BLACK)	0750-43-11-SLIDER (ABS BLACK)	0750-52-17-COUPLER (Nylon 6/6)	0750-60-19-GLUED FOAM (MTC OF RoHS)	0750-68-13-STOPPER RUBBER (MTC OF RoHS)	.
Volt Drop : 0.1 V Max (Before test), 0.25 V Max (After test)	D														
Product should comply to ROHS requirement.	R	R	R	R	R	R	R	R	R	R	R	R	R	R	
Insulation resistance : 1 M ohm (Measured by 500V Megger)	D														
Operation Force : 2.94 +0/-1.4 N (300+0/-150 gf) Initial 4.9 +1.95/-0 N (500+200/-0 gf) Stroke 8 mm						D									
DURABILITY: Insulation Resistance 1M ohm (measured by 500V megger),voltage drop 0.1 V Max(Before test) 0.25V Max (After test) and operation force 2.94 +0/-1.4 N (300+0/-150 gf) Initial and 4.9 +1.95/-0 N (500+200/-0 gf) Stroke 8 mm shall be met after 40,000 cycle operation at 12V, 2A under the following conditions: Stroke: 8 mm, Operation cycle Rate:15/Min.	D				RP	D		RP							
Vibration Resistance :As per JIS D 1601 (Type 1, Class B)															
Working Temp. range : Shall operate normally,be free from															

Design Validation Plan (DVP)

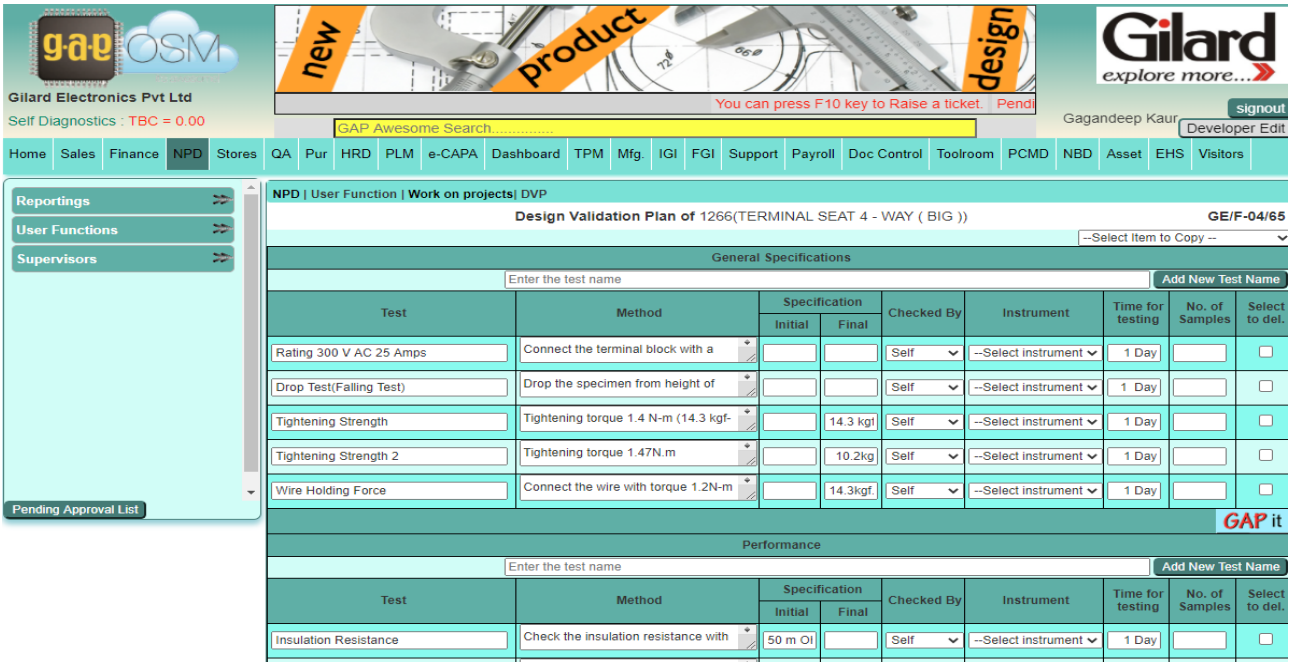

Performance Testing Sheet

Gilard explore more...	DVP-Performance Testing of 750-02 (Door Switch)	Date :	28-08-2019
		Time :	12:57:17pm
		Doc No :	GE/F-04/12

Part Name:	750-02-Door Switch	Customer:	C7453-SML ISUZU LIMITED

Performance Test(Initial)

S.no.	Test	Method	Equipment	Specification		
				Specified	Observed	Result
1	Rating			12 Volts,2Amperes		
2	Insulation Rasistance	Check insulation resistance between Terminal and Body.	IT-	1M Ohms		
3	Voltage Drop	Check voltage drop across the terminals of switch at On position		0.1 V		
4	Operating Force	Push the switch with Knob of Force Gauge	FG-	2.94+0/-1.47N(300+0/-150GF)		

Climatic/Endurance Test

1.Durability

Test :	Durability
Method :	Shall Fullfill Insulation resistance,Voltage Drop and operation force after 40000 cycles at12V,2A under the following condition-Stroke 8 mm,Operation Cycle Rate-15 SPM
Equipments :	

Post Test Observations:	Results

Performance(Final)

Product Costing Sheet

Gilard Electronics Pvt Ltd

Self Diagnostics : TBC = 0.00

You can press F10 key to Raise a ticket. Pending Appr

GAP Awesome Search.....

Gagandeep Kaur signout Developer Edit

Home | Sales | Finance | NPD | Stores | QA | Pur | HRD | PLM | e-CAPA | Dashboard | TPM | Mfg. | IGI | FGI | Support | Payroll | Doc Control | Toolroom | PCMD | NBD | Asset | EHS | Visitors

PLM | User Function | Finished Product Related | (show All)

BILL AND COST OF MATERIAL 1266 View Remove Scroll

#Cat No. : 1266	Description : TERMINAL SEAT 4 - WAY (BIG)	Sub Assy :	Team : F	Production per Man Day : 250	AWO Print Required : Yes

S.No.	Part No.	Description	Photo	Drawing	Qty Per Piece	Unit	Is it a Sub Assy	Source	Purchase Cost	Raw Material Cost	Process Cost	Finishing Cost	Total Cost	Amount
1	1266-54-01	HOUSING	NO IMAGE		1	NOS	N	Inhouse	0	3.80	0.81	0.00	4.61	4.61
2	1266-54-02	HOUSING COVER	NO IMAGE		1	NOS	N	Inhouse	0	1.00	0.81	0.00	1.81	1.81
3	1266-27-03	TERMINAL PLATE	NO IMAGE		4	NOS	N	Inhouse	0	2.16	0.25	0.20	2.61	10.44
4	1265-06-04	SCREW M4x10			7	NOS	N	Purchase	0.59	0	0	0	0.59	4.13
		TOTAL							4.13	13.44	2.62	0.8		20.99

Edit/Add Print SELLING PRICE LIST

Total Tooling Cost		Total BOM Cost	20.99
Total Design Cost		Total Cost Estimation	

Part List with details

Gilard Electronics Pvt Ltd
Self Diagnostics : TBC = 0.00

GAP Awesome Search.....

Gagandeep Kaur signout Developer Edit

Home | Sales | Finance | NPD | Stores | QA | Pur | HRD | PLM | e-CAPA | Dashboard | TPM | Mfg. | IGI | FGI | Support | Payroll | Doc Control | Toolroom | PCMD | NBD | Asset | EHS | Visitors

NPD | User Function | Work on projects

Part List — GE/F-04/21 Indent Review Sheet

Item Description: TERMINAL SEAT 4 - WAY (BIG)	Item No.: 1266	Drawing available: Y	Design Plan No.:	Prepared by: -99@99
Customer: DAIKIN AIRCONDITIONING INDIA PVT. LTD	Action Required:	Sub Assy.	Prod. per MAN day: 250	Assy. Cost: 4.08

save

S.No.	Part No.		Description	Qty/Pc.	Sub Assy (Y/N)?	Mfg. Process & Raw Material	Material Grade, if any	Item Source	Raw Material Code	Cost	Drawing/SPCN no.	Drawing Available	Click to Del.
1	1265-06-04	Design Review	SCREW M4x10	7	N			Purchase		0.59	12650604.jpg	Y	
2	1266-27-03	Design Review	TERMINAL PLATE	4	N	PROGGERSIVE TOOL , TAPPING1 , TAPPING 2		Inhouse	0027-08-24	2.61	12662703.jpg	Y	
	0027-08-24		BRASS ROLL 0.8 X 90 MM HB (Rs. 416)	7.87				Purchase					
3	1266-54-01	Design Review	HOUSING	1	N	INJECTION MOULDING		Inhouse	0054-00-31	4.61	12665401.jpg	Y	
	0054-00-31		PBT 30% GF BLACK(FR V-0) (Rs. 204.1)	19				Purchase					
4	1266-54-02	Design Review	HOUSING COVER	1	N	INJECTION MOULDING		Inhouse	0054-00-31	1.81	12665402.jpg	Y	
	0054-00-31		PBT 30% GF BLACK(FR V-0) (Rs. 204.1)	5				Purchase					

Development Status Review

Gilard Electronics Pvt Ltd
Self Diagnostics : TBC = 0.00

GAP Awesome Search.....

Gagandeep Kaur signout Developer Edit

Home | Sales | Finance | NPD | Stores | QA | Pur | HRD | PLM | e-CAPA | Dashboard | TPM | Mfg. | IGI | FGI | Support | Payroll | Doc Control | Toolroom | PCMD | NBD | Asset | EHS | Visitors

NPD | User Function | Work on projects

Status of 1266 (TERMINAL SEAT 4 - WAY (BIG))

R-Required, S-Submitted, A-Approved

Progressive Log

Part No.	Drawing			Make/Buy	Source/RM source			Process	DRC			Tool No.	Tool Design			Tooling			Trial			Verification		
	R	S	A		R	S	A		R	S	A		R	S	A	R	S	A	R	S	A	R	S	A
Start Date																								
EDC																								
1265-06-04	✓	✓ 22-05	✓ 30-05	Buy	✓	✓ 06-06	✓ 25-06		✓	✓ 25-06	✓ 01-08		Not required			Not Required			Not Required			✓	✓ 01-08	✓
1266-27-03	✓	✓ 24-06	✓ 24-06	Make	✓	✓ 24-06	✓ 29-06	Blanking, bending, Tapping In progressive tool & Plating	✓	✓ 25-06	✓ 28-08	1266-03-A1, 1266-03-A2	✓	✓ 28-08	✓ 28-08	✓	✓ 28-08	☐	✓	✓ 28-08	✓ 20-09	✓	✓ 20-09	✓
1266-54-01	✓	✓ 24-06	✓ 24-06	Make	✓	✓ 24-06	✓ 25-06	Injection Molding	✓	✓ 25-06	✓ 28-08	1266-01-A1	✓	✓ 28-08	✓ 28-08	✓	✓ 28-08	☐	✓	✓ 28-08	✓ 20-09	✓	✓ 20-09	✓
1266-54-02	✓	✓ 24-06	✓ 24-06	Make	✓	✓ 24-06	✓ 25-06	Injection Molding	✓	✓ 25-06	✓ 28-08	1265-02-A1	✓	✓ 28-08	✓ 28-08	✓	✓ 28-08	☐	✓	✓ 28-08	✓ 20-09	✓	✓ 20-09	✓

Defining the Process Stations with Required Inputs

Process Flow Chart Of 750-02-Door Switch — **GE/F-04/40**

S. No.	Stn. No.	Process Description	Inputs	(T)ool / (M)achine / (C)hecking Aids	Cycle Time	Action	Add Input	Delete Input
1	S-10	Soldering of Wire with Terminal	0016-01-02 (FRYSOL PASTE FLUX) 0.02 0750-27-14 (FLOATING TERMINAL) 1 0750-73-16 (PVC WIRE BLACK) 1 0016-02-01 (Solder Wire (1.0mm dia) lead free) 0.08	T --Select Tool + M --Select Machine-- C -Select- + *Added Tools* M-750-001 *Added Machines* *Checking Aids*	26	Save Add Img.	-Add-	-Del-
Process Detail : Enter Process Procedure								Save
2	S-20	Assembly of S-1 with Slider	S-1 1 0750-43-11 (SLIDER) 1	T --Select Tool + M --Select Machine-- C -Select- + *Added Machines* *Checking Aids*	31	Save Add Img.	-Add-	-Del-
Process Detail : Enter Process Procedure								Save
3	S-30	Adhesive Filling	0080-04-22 (ARALDITE (HARDENER & RESIN)) 1 S-2 1.5	T --Select Tool + M --Select Machine-- C -Select- + *Added Machines* -000- OPERATOR/ASSEMBLER *Checking Aids*	125	Save Add Img.	-Add-	-Del-
Process Detail : Enter Process Procedure								Save
4	S-40	Assembly of S-3 with Body and Spring	S-3 0 0750-43-10 (BODY) 1 0750-02-15 (SPRING) 1	T --Select Tool + M --Select Machine-- C -Select- + *Added Machines* *Checking Aids*	30	Save Add Img.	-Add-	-Del-
Process Detail : Enter Process Procedure								Save

Process Flow Chart

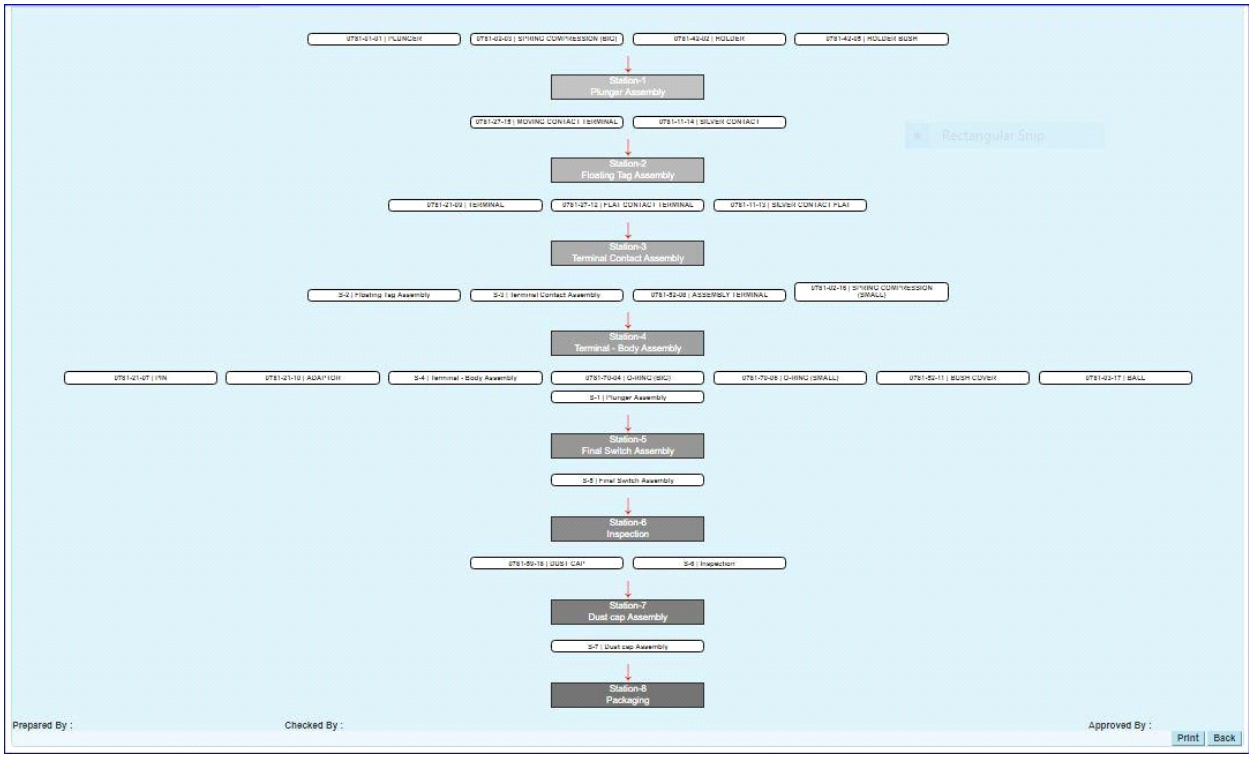

Process FMEA Work Sheet

Gilard Electronics Pvt Ltd
Self Diagnostics : TBC = 0.00

You can press F10 key to Raise a ticket. Pending Approvals

GAP Awesome Search.....

Gagandeep Kaur signout Developer Edit

Home | Sales | Finance | NPD | Stores | QA | Pur | HRD | PLM | e-CAPA | Dashboard | TPM | Mfg. | IGI | FGI | Support | Payroll | Doc Control | Toolroom | PCMD | NBD | Asset | EHS | Visitors

NPD | User Function | Work on projects| Partlist | Child part detail | PFMEA

Process Failure Mode And Effects Analysis (PFMEA) GE/F-04/48 Child Part PFMEA

--Select Item to Copy --

Item No.:	1266	FMEA Number:	1266	Description	TERMINAL SEAT 4 - WAY (BIG)
Process Responsibility	--select Ecode--	Date (Orig.):		Date (Rev.):	19-11-2019
Core Team: Add core team member	Gagandeep Singh-(NPD)	Pankaj Arora-(NPD)		Prepared by	E2406(Ankush Dhiman)E2653(Dron Karkhal)E2652(Ramandeep Kaur)E2317(Neeraj Chand)

If RPN >100,improvement is required. If SEVERITY=9 and RPN >36,improvement is required. If SEVERITY=8 and RPN >125,improvement is required. Save

Function	Requirement	Potential Failure Mode	Potential Effects of Failure	Class (SAFE)	Potential Cause of Failure	Current Control Occurrence	Current Control Detection	S	O	D	RPN	Improve RPN	Del
Pad Printing	Clear White Printing	Printing in reverse direction	Pieces not as per drawing &	A, F	Direction of placing part on	Printing Fixture with Poke-Yoke	Visual check	6	2	8	96		
Tag insertion & Cover Fitment	Tag should be inserted Properly	Tag not inserted to full position	Mating with the connectors	F	Tag not pushed to the last	In case of partial insertion, during	Visual check	6	2	8	96		
Screw Tightening	Total Number of Screws is 7	Screw missed	Mating part fitment at	F	Manual operation	Exact quantity of parts would be	Visual Check	6	3	5	90		
Packing	Should be packed as per	Quantity packed less or more	Customer annoyance,	F	No packing standard defined	Exact quantity of parts would be	Material weight is monitored	4	2	6	48		

Process FMEA Print Out

Gilard explore more...

PFMEA of 781-01

(NEUTRAL SAFETY SWITCH (NC TYPE))

GE/F-04/48

Issue:06 Date: 17-11-2017

Item no.		Description	NEUTRAL SAFETY SWITCH (NC TYPE)	Design Responsibility	Talwinder Singh(E2336)	Prepared By	Sanjiv Singh
Date(Revision)	17-11-2017	Date(Original)	17-11-2017	Core Team	Maninderjit Singh-E2324(DES)		Manvinder Kaur-E2227(HRD)

Function	Potential Failure Mode	Potential Effects of failure	Current Control Occurrence	Current Control Detection	S	O	D	RPN	Improved Control Occurrence	Improved Control Detection	S	O	D	RPN
Terminal - Body Assembly	Terminal not resting properly on its original position	Change in pre travel and over travel of the component	1. Length of terminal head is more 2. Stroke length of press is not proper	1. Inspection of Terminal by IGI 2. 5 samples are approved 3. Gauge provided	8	2	5	80			1	1	1	1
Plunger Assembly	1. Pre travel changes 2. Holder and Holder bush cracks	Components gets dis-assembled and does not work	1. Length of plunger is less or more 2. Material is not as per specification 3. Material gets over heated	1. 5 samples are approved 2. Specification sheet of material is provided.	8	2	6	96			1	1	1	1
Final Switch Assembly	1. Flaring of adaptor is not proper	assembled piece will get dis-assembled on pressing of plunger with force	1. Stroke length of press is not proper	1. 5 samples approval 2. Inspection of 10 Pieces by inspector every AWO	8	2	5	80			1	1	1	1
			1. Fatigue of	1. Inspection of 10 samples by										

Special Characteristics Matrix

Gilard
explore more...
Gilard Electronics Pvt Ltd

Special Characteristics Matrix

Date : 17th of November 2017
Time : 10:30:41 AM
User : Sanjiv Singh

Special characteristics is a product characteristics that can affect safety or compliance with Regulation,fit function,performance or subsequent process of product.
Special characteristic can be classified as :

(1) Safety Characteristics (S) : Are those which affects the product safety,operator safety and compliance with regulatory requirements.
(2) Product Characteristics (A) : Are those which affect the aesthetics of product.
(3) Fit and Function characteristics (F) : Are those which affect fit and function of product.
(4) Environmental characteristics (E) : Are those which are affected by the environment.

Item number	781-01	Description	NEUTRAL SAFETY SWITCH (NC TYPE)	Customer	C10052-PRICOL LIMITED
Date(Original)	--	Date(Revision)	--	Project I/C	Talwinder Singh(E2336)

S.No.	Function	Tolerance	SPL.CHR	Source Of SPL. CHAR.					Control of SPL. CHAR.			
				Cust. Specified	Feasibility Study	CAPA	D/P FMEA	Others	DRG./SPEC.	Control Plan	PQP	Others
1	Push to off at the pressing of plunger											
2	Working voltage 24+- 0.5 V DC											
3	Mounting											
4	Terminal Fitting with Coupler at customer end											
5	Switching point (ON)											
6	Operating Stroke											
7	Operating Force- Contact operation 16N+-20%											
8	Operating Force- At full stroke 25N+-20%											
9	Silver Plating on Terminal											
10	Brass material of Adaptor											
11	Ball											

Inspection Sheet for Layout and PDI (Pre Despatch Inspection)

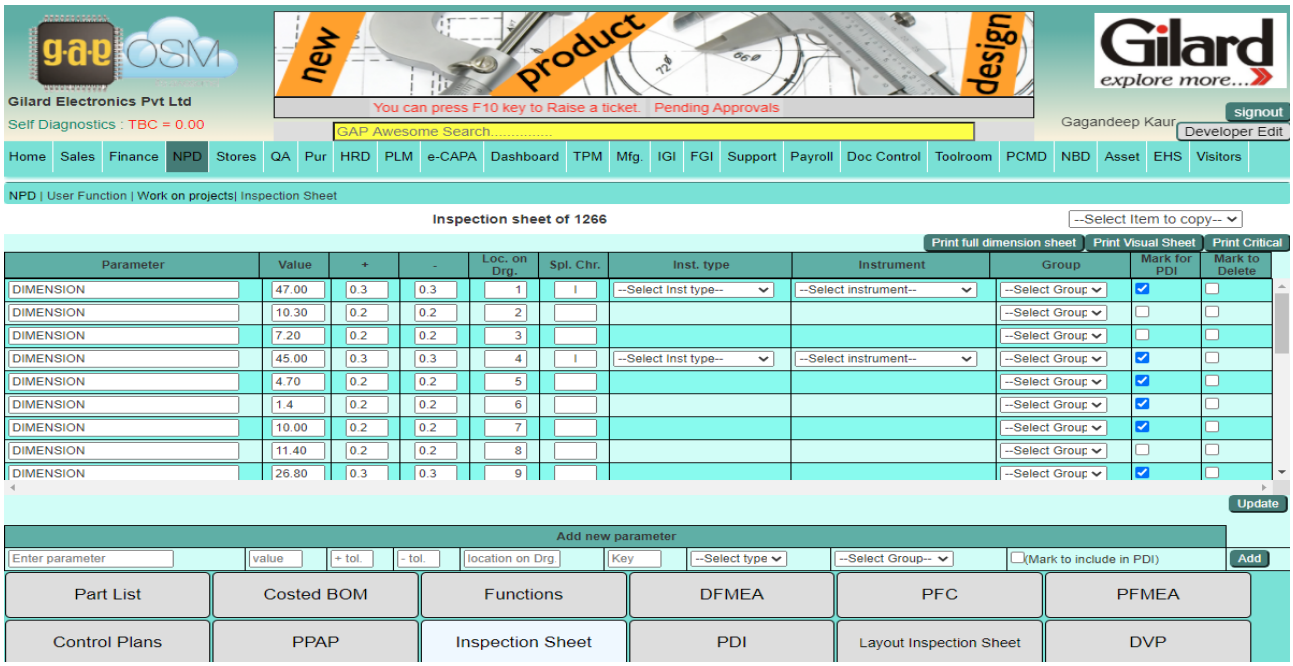

Layout Inspection Sheet

Gilard
explore more...

Layout Inspection Sheet 781-01

(NEUTRAL SAFETY SWITCH (NC TYPE))

Date: 17-11-2017

Time 10:31:29am

GE Part	781-01		
Part Name:	NEUTRAL SAFETY SWITCH (NC TYPE)	Customer:	C10052-PRICOL LIMITED

Dim. No.	Parameter	Specification			Actual Observations										Range	Decision
		Value	+	-	1	2	3	4	5	6	7	8	9	10		
1	Dimension	20	0.5	0.5												
2	DIMENSION	11	0.2	0.2												
3	DIMENSION	22.20	0.2	0.2												
4	DIMENSION	8.70	0.2	0.2												
5	DIMENSION	10.00	0.2	0.2												
6	DIMENSION	1.60	0.25	0.25												
7	DIMENSION X 2	4	0.1	0.1												
8	DIMENSION (SWITCHING POINT ON)	18.4	0.5	0.3												
9	DIMENSION (OPERTING STROKE)	13		1												
10	DIA (MAX)	29	0.2	0.2												
11	DIMENSION (A/F)	27		0.33												
12	DIMENSION (M18 X 1.5 -6G)															
14	DIMENSION (M27 X1 -6G)															
15	DIMENSION	8.00	0.2	0.2												
16	MARKING DETAILS															
13	DIAMETER	6	0.05	0.05												

PDI Sheet

Gilard
explore more...

PDI of 750-02
(Door Switch)

Date:	28-08-2019
Time	02:40:56pm
Doc No:	GE/F-10/27

Item :	750-02	No. :	
Part Name:	Door Switch	Customer:	C7453-SML ISUZU LIMITED

Sample Size For Dimensional Check : (Sampling plan:)	Random Data ○Yes ○No	Sample Size For Attribute Check :	AQL :

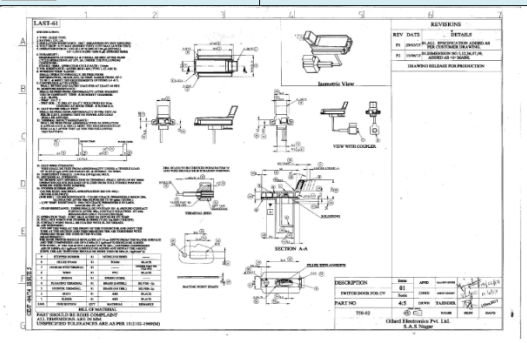

Loc	Parameter	Test method	Equipment	Acceptance	
Apperance					
0	No Flash in Moulded part				
0	NoCut marks on insulation of wire.				
0	No Spilage of Araldite on Body				
0	Stopper Rubber should be Propely fit on Slider head				
0	Coupler Terminal should not come outside from Coupler				
Functional					

Checking Aids List

NPD | User Function | Work on projects | PPAP | Instruments and Gauges

Checking Aids List
Instruments & Gauges Used in Project

Part Name: | Part Number :

S. No.	Instrument Code	Instrument Description	Least Count	Calibration Last Done	Calibration Next Due	MSA Last Done	MSA Next Due
1	SG044	GAUGE FOR 2162,	-	16-01-2018	15-07-2018	01-07-2016	01-07-2017
2	CR010	MILLIOHM METER	0.001m	26-09-2017	26-09-2018	01-07-2016	01-07-2017
3	EC044	ELECTRONIC CALIPER	0.01MM	11-08-2017	07-02-2018	01-07-2016	01-07-2017
4	EC044	ELECTRONIC CALIPER	0.01MM	11-08-2017	07-02-2018	01-07-2016	01-07-2017

SUPPLIER'S SIGNATURE | Status as on: 03-02-2018

Print | Back

Skills Required and Available Plan

Gilard Electronics Pvt Ltd
Self Diagnostics : TBC = 0.00

Please click to read : Best Place to work ,
GAP Awesome Search.....
John Smith [User] signout

Home | Sales | Finance | NPD | Stores | QA | Pur | HRD | PLM | e-CAPA | Dashboard | TPM | Mfg. | IGI | FGI | Support | Payroll | Doc Control | Tool | PCMD | NBD | Asset | EHS | Visitors

NPD | User Functions | Work on Projects

Define Process, Stations & Skills for : 750-02 Door Switch

--Select item to copy

Qty / Month.	1250	TAKT Time in mins.	9.6	Actual Cycle Time in secs. (ACT) :	322
Qty / Day	50	TAKT Time in secs.	576	Operators Required (ACT*50/28800) :	1

Unskilled | Medium Skilled | High Skilled | Critical

S.No.	Station	Process Name	Delegate to operator	Cycle Time in secs.	Time required for 50 pcs in secs.	Qty used per assy	Skill Required
1.	S-10	Soldering of Wire with Terminal	Select operator	26	1300	1	
2.	S-20	Assembly of S-1 with Slider	Select operator	31	1550	1	
3.	S-30	Adhesive Filling	Select operator	125	6250	1	
4.	S-40	Assembly of S-3 with Body and Spring	Select operator	30	1500	1	
5.	S-50	Terminal Fitting and Locking	Select operator	35	1750	1	
6.	S-60	Crimping & Insertion of Stopper Rubber and coupler Terminal	Select operator	35	1750	1	
7.	S-70	Taping of Glued Foam	Select operator	20	1000	1	
8.	S-80	Inspection	Select operator	20	1000	1	
9.	S-90	Packaging & Labeling	Select operator		0	1	
				322	89 pc per Operator		

S.No.	Operator	Total Available time	Allocated Time
1	Operator1	28800	0

Operator wise Responsibility

Contact HRD Department to create team for this item.

Sr.No	Ecode	Name	Dep	Sec.	Skill
1.	E2461				Unskilled
2.	E0649	Manjit Kaur	ASS	TEAM K	Unskilled
3.	E0897	Karamjit Kaur	ASS	TEAM A	Unskilled
4.	E2426	Karamjit Kaur	ASS	TEAM A	Unskilled

Update Skills

Skills Development Plan

Gilard explore more...
Gilard Electronics Pvt Ltd

Skill Level PLanning Sheet For Series 781-01

Date:17-11-2017

Sr.No	E-Code	Name	As Is	Terminal - Body	Plunger Assembly	Final Switch	Inspection	Dust cap	Packaging
1	E0103	Neelam Devi	H						
2	E0923	Amarjit Kaur	H						
3	E0980	Karamjeet Kaur	H						
4	E0982	Bhavana	H						
5	E1253	Bhupinder Kaur	H						
6	E1310	Pratima Gupta	U						
7	E1378	Sapna Devi	M						
8	E1512	Roshani	M						
9	E1658	Rajni	M						
10	E1734	Gursharan Kaur	M						
11	E1965	Sheetal Kumari	U						

Print Preview | Back

Child Part Detailing

Child part details

Child Part number:	2197-07-06	Description:	MAIN CHASSIS
Part type:	CHILD PARTS	Source:	Purchase

Drawing

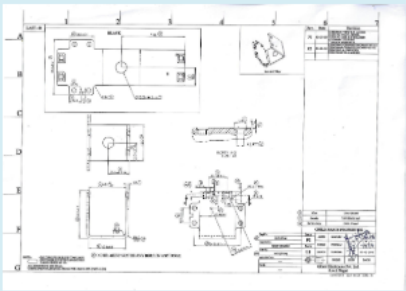

Choose File | No file chosen

Picture

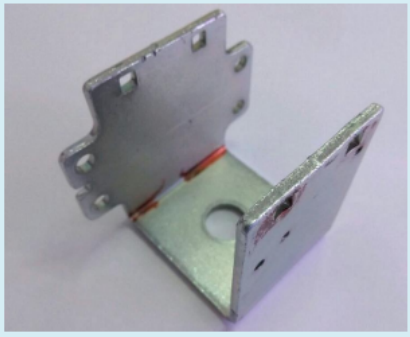

Choose File | No file chosen

Update | Back

Raw Material | Plating data | PFC / Machine Setup | Control Plan

Drawing | Picture | Inspection | PFMEA

Child Part Raw material details

Raw Material Information:- 2507-01 FIELD MOULDING (26214560)

RAW MATERIAL USED

Raw Material Code	0052-00-14 (Rate Rs.200.0084)
Raw Material Description	NYLON 6/6 33% GF BLACK
Qty made per NOS of RM	28.000
Scrap generated per NOS of RM	137.200
Scrap code:	0052-00-14 (Rs.20.0000)
Unit	NOS
Shop	S2410 Inhouse :
% Regrind allowed	20
COST OF EXTRA	7.78
RMC per piece	
7.05200.0084 - (0.1372 X 20.0000) / 28.000 = 7.05+7.78=14.83	

EXTRAs USED

RM CODE	DESCRIPTION	NO PER PIECE
2507-07-02	'W' LUCAR PLATE	1.00000
2507-07-03	'WL' PLATE	1.00000
2507-07-04	FIELD PLATE	1.00000
2507-27-05	PHASE PLATE	3.00000

Child Part Processing Details

Machine Setup of Item No. 2507-01 / FIELD MOULDING (26214560)

Seq. No	Process	M/c. Code	Machine Description	Cycle Time in secs	No of Cavi-ties	Qty Per Hour	Tool No.	Shop	Other Family Members	Process Cost	Action
01	INSERT MOULDING	M0020 A	T55 MULTIPLAS VERTICAL MC 3 - 55 T	78.00	1	46	2507-01-A1	S2410	None	5.78	SAVE DROP
	Alternate Machine / Set As Default	M0008	T30 MULTIPLAS VERTICAL MC 1 - 30T	130.91		0				0	SAVE DROP
									Total Process Cost in (Rs)	5.78	

Child Part Finishing details

Plating Data : 2507-07-02 ('W' LUCAR PLATE)

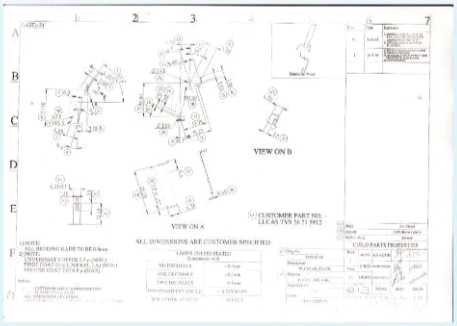

Surface Area in mm square	836.00	No. of pcs.in 1 Kg	487
Surface Area of 1 kg in dm square	40.7132		
Under Coat	COPPER	2.50	Microns
Plating	NICKEL	8.50	Microns
Finishing Cost Per pc.(in Rs.)	0.34		
Special Instruction For Plating	PLATING TO BE DULL & PLATING SPECIFIED IS MINIMUM.		

Child Part Control Plans

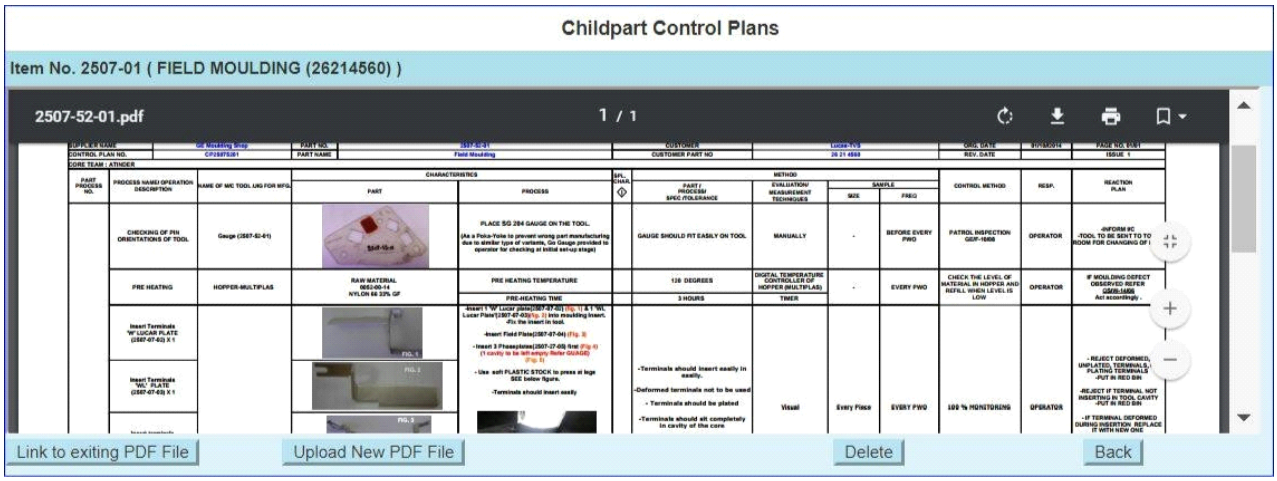

Part Submission Warrant

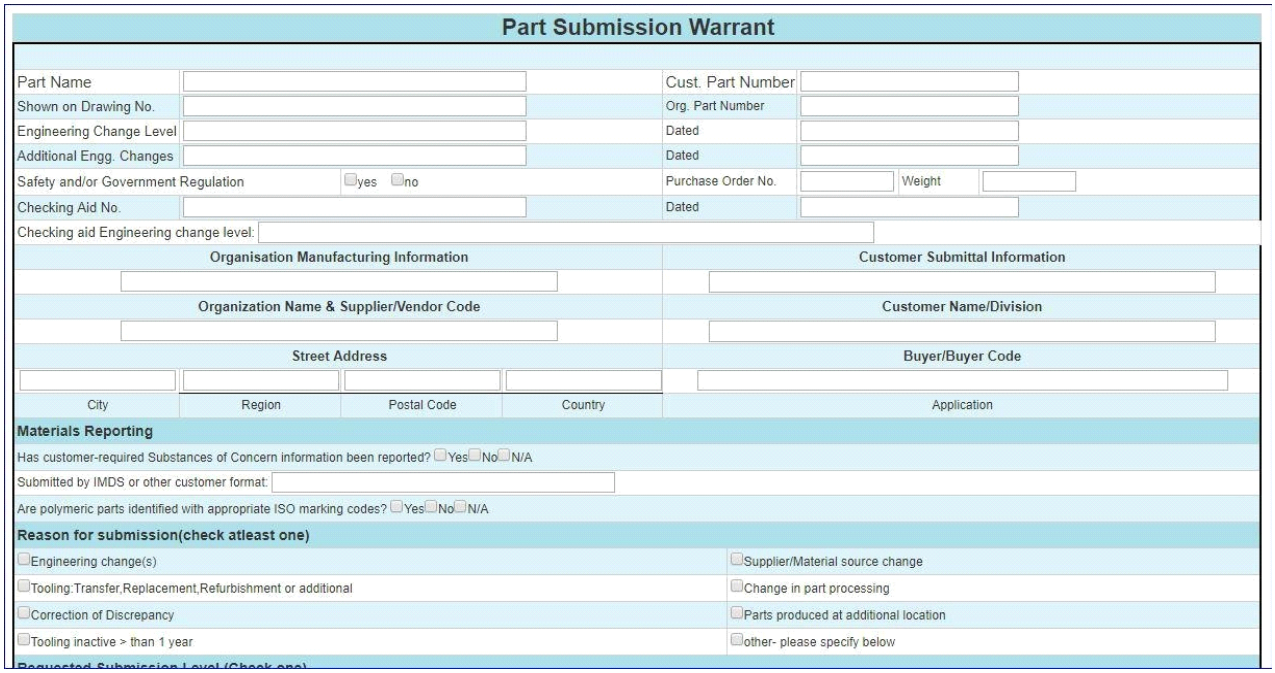

Part Submission Warrant

Part Name		Cust. Part Number	
Shown on Drawing No.		Org. Part Number	
Engineering Change Level		Dated	
Additional Engg. Changes		Dated	
Safety and/or Government Regulation	☐yes ☐no	Purchase Order No.	Weight
Checking Aid No.		Dated	
Checking aid Engineering change level:			

Organisation Manufacturing Information	Customer Submittal Information
Organization Name & Supplier/Vendor Code	**Customer Name/Division**
Street Address	**Buyer/Buyer Code**
City / Region / Postal Code / Country	Application

Materials Reporting

Has customer-required Substances of Concern information been reported? ☐Yes ☐No ☐N/A

Submitted by IMDS or other customer format:

Are polymeric parts identified with appropriate ISO marking codes? ☐Yes ☐No ☐N/A

Reason for submission(check atleast one)

☐Engineering change(s)	☐Supplier/Material source change
☐Tooling:Transfer,Replacement,Refurbishment or additional	☐Change in part processing
☐Correction of Discrepancy	☐Parts produced at additional location
☐Tooling inactive > than 1 year	☐other- please specify below

Requested Submission Level (Check one)

PPAP Documents

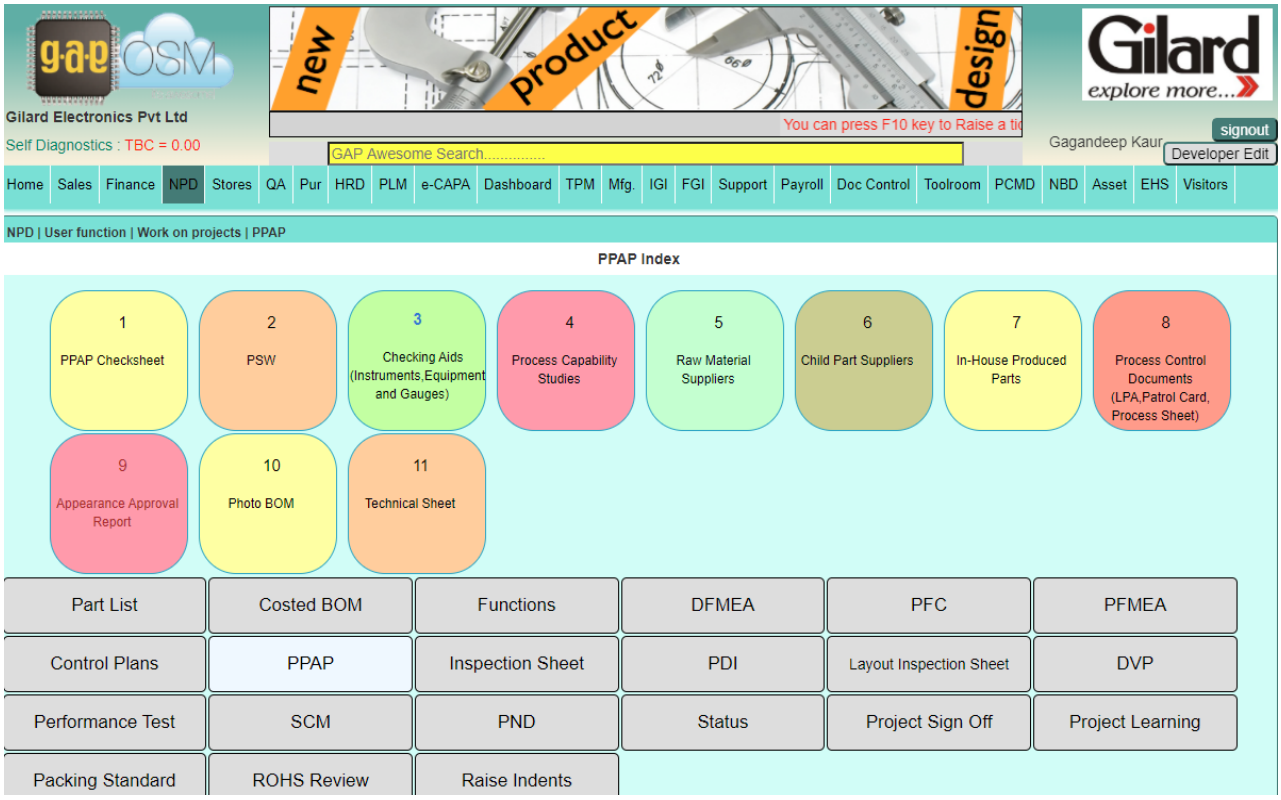

Gilard Application Programmers LLP

C-132, Phase VIII,
Industrial Area, Mohali,
PUNJAB INDIA

www.gaposm.com

sanjiv@gaposm.com

0172-5020510
+91-9888111773